Tel: (86 757) 8252 3552, 8625 6816
Fax: (86 757) 8626 9260, 8625 6780
E-mail: sales@eaglerise.com
Homepage: www.eaglerise.com / www.eaglerise.cn

# 40W LED Driver Constant current

## LS-40-XXX TRIAC LI

■ **Approve**

SELV CE

## ■Features

- Class II，SELV，independent
- Input Voltage 220-240VAC
- Protections: SCP/OLP/OVP
- Power Factor >0.9
- Efficiency ≥87%
- Support Leading edge & trailing edge dimmable
- 5 years warranty

## ■Applications(Typ.)

- LED panel
- LED pendant lights
- LED down lights

## ■Description

LS-40-XXXX TRIAC LI is a 40W constant current LED driver that operates from 198-264Vac input with 600-1050mA output current. With it's compact dimensions from 150X45X30 mm it is easy to integrate in LED panel, pendant light and down light products. To ensure trouble-free operation, protection is provided against output short circuit and over Load.

## ■Model code

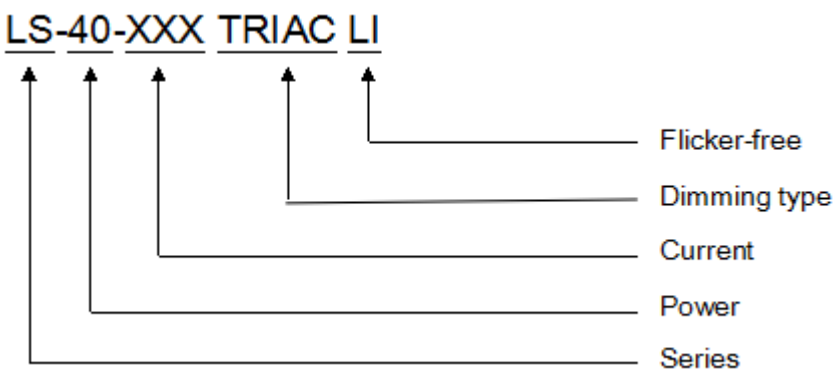

Tel: (86 757) 8252 3552, 8625 6816
Fax: (86 757) 8626 9260, 8625 6780
E-mail: sales@eaglerise.com
Homepage: www.eaglerise.com / www.eaglerise.cn



## ■Specification

| | | | | | |
|---|---|---|---|---|---|
| Input | Rated input voltage | 220-240Vac | | | |
| | Range of input voltage | 198-264Vac | | | |
| | Frequency(Hz) | 50/60 Hz | | | |
| | Power Factor | >0.9@230Vac, full load | | | |
| | Input Current max | 0.25A MAX. @Full Load,198Vac | | | |
| | Start-up time | < 0.5S | | | |
| | Unload Power Consumption | ≤1W | | | |
| | Inrush Current | 30A Max. | | | |
| | Leakage Current | < 0.7mA(240VAC) | | | |
| Output | Constant Current Max. *Note.3 | 600mA | 650mA | … | 1050mA |
| | Unload voltage Max. (VDC) | 82V | 77V | … | 53V |
| | Voltage Range(VDC) | 44-67V | 41-62V | … | 27-40V |
| | Rated power | 40.2W Max. | 40.3W Max. | … | 42W Max. |
| | Current Accuracy | ±5%@220-240Vac | | | |
| | Voltage Regulation | ±5% @Full Load, 220-240Vac | | | |
| | Load Regulation | ±5%@220-240Vac | | | |
| | Hold-up Time | 1s max.@Full Load | | | |
| | Ripple& Noise *Note.2 | ≤±3% @Full Load,230VAC | | | |
| | Output LF current ripple(<120Hz) | ≤±3% @Full Load,230VAC | | | |
| | Efficiency(Typ.) | ≥87% | | | |
| Dimming | Dimming mode | Triac，Leading edge & trailing edge dimmable | | | |
| | Dimming current range | 10% ~ 100% | | | |
| Protection | Over Load Protection | 103-120% | | | |
| | | Protection type: Auto Resume | | | |
| | Over Voltage Protection | >82VDC | >77VDC | … | > 53VDC |
| | | Protection type: Auto Resume | | | |
| | Short circuit Protection | Protection type: Auto Resume | | | |
| Environment | Operating Temperature | -20℃…+45℃ | | | |
| | tc | 75℃ | | | |
| | Storage Temperature | -20℃…+60℃ | | | |
| | Life time | > 30,000h@ta=45℃ | | | |
| | Humidity | 20%-90%RH | | | |
| Others | Dimension | 150X45X30(LXWXH)mm | | | |
| Safety & EMC | Safety standards | EN 61347-1; EN61347-2-13; EN62384 | | | |
| | Withstand voltage | Input-output：3750V/5mA/1min | | | |
| | Isolation resistance | Input-output：≥4MΩ@500VDC | | | |
| | EMI | EN55015; EN61000-3-2 Class C; EN61000-3-3 | | | |
| | EMS | EN 61547; EN 61000-4-2; EN 61000-4-5 —L-N: 1KV | | | |
| Note | 1.All parameters NOT specially mentioned are measured at 230VAC input, full load and 25℃ of ambient temperature.<br>2.Ripple & Noise are measured at 20MHz of bandwidth by using a 300mm twisted pair-wire terminated with a 0.1uF & 47 uF parallel capacitor.<br>3.Output current can be from 600mA to 1050mA and increasing in multiples of 50mA. Please see Model list below and contact EAGLERISE for details. | | | | |

Tel: (86 757) 8252 3552, 8625 6816
Fax: (86 757) 8626 9260, 8625 6780
E-mail: sales@eaglerise.com
Homepage: www.eaglerise.com / www.eaglerise.cn

# 40W LED Driver Constant current

## LS-40-XXX TRIAC LI

## ■Model list

| No. | Model number | Input | | | Output | | | Max. Prated(W) |
|---|---|---|---|---|---|---|---|---|
| | | Voltage (VAC) | Max.Current (A) | Frequency (Hz) | Constant current (mA) | Normal working voltage (VDC) | No load working voltage (VDC) | |
| 1 | LS-40-600 TRIAC LI | 220-240 | 0.25 | 50/60 | 600 | 44-67 | 82 | 40.2 |
| 2 | LS-40-650 TRIAC LI | 220-240 | 0.25 | 50/60 | 650 | 41-62 | 77 | 40.3 |
| 3 | LS-40-700 TRIAC LI | 220-240 | 0.25 | 50/60 | 700 | 36-54 | 68 | 37.8 |
| 4 | LS-40-750 TRIAC LI | 220-240 | 0.25 | 50/60 | 750 | 35-53 | 66 | 39.8 |
| 5 | LS-40-800 TRIAC LI | 220-240 | 0.25 | 50/60 | 800 | 33-50 | 64 | 40.0 |
| 6 | LS-40-850 TRIAC LI | 220-240 | 0.25 | 50/60 | 850 | 31-47 | 62 | 40.0 |
| 7 | LS-40-900 TRIAC LI | 220-240 | 0.25 | 50/60 | 900 | 27-42 | 55 | 37.8 |
| 8 | LS-40-950 TRIAC LI | 220-240 | 0.25 | 50/60 | 950 | 27-42 | 55 | 39.9 |
| 9 | LS-40-1000 TRIAC LI | 220-240 | 0.25 | 50/60 | 1000 | 27-40 | 53 | 40.0 |
| 10 | LS-40-1050 TRIAC LI | 220-240 | 0.25 | 50/60 | 1050 | 27-40 | 53 | 42.0 |

## ■Wiring diagram

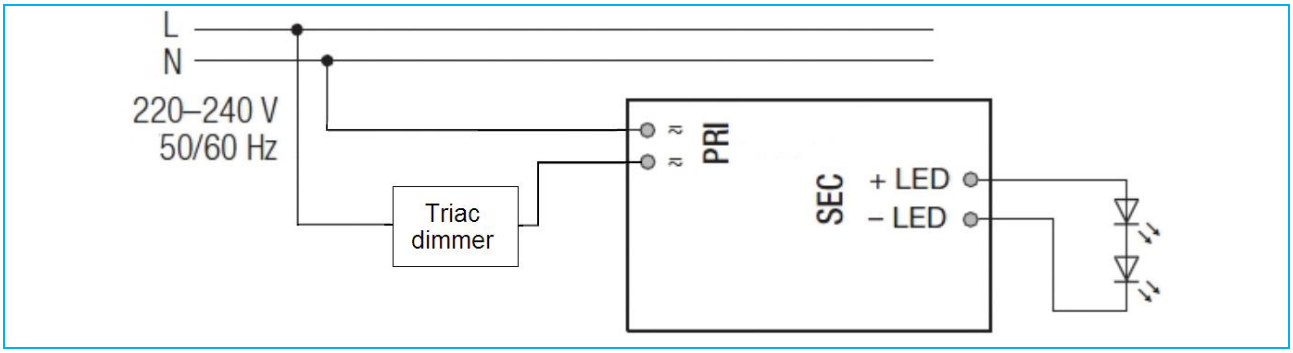

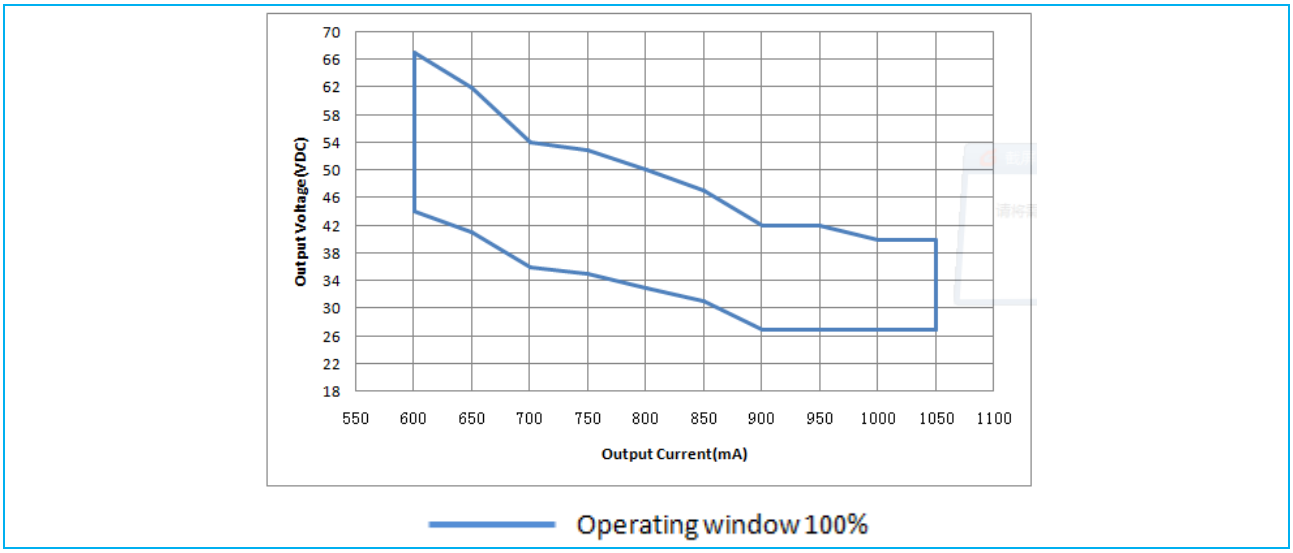
## ■Operating window